Introduction to Logic Gates – Breadboard

**Submitted by:**

| Name | ID |
|---|---|
| Nawaf Alabdi | B00093759 |
| Ali Abdelateif | B00099836 |

**Submitted to:**

Ms. Salsabeel Shapsough

Lab Instructor

American University of Sharjah

College of Engineering

**Submitted on:**

16/09/2024

**Abstract**

In this lab we implemented two different logic circuits both virtually through LogiSim, and practically using the breadboard and provided (7404, 7408, 7432) IC chips.

## Introduction

In this lab we will learn how to use the breadboard to implement and test logic circuits in real life using the provided 74-family IC chips. In the beginning, we will implement a simple Boolean function using 4 inputs and 3 IC chips (AND, OR and NOT), and an LED to check our output. Then we will design a more complex circuit using 3 inputs and more logic gates, and note down the truth table and simulate it in LogiSim. After we verify our circuit, we will implement it using a digital design kit known as a breadboard.

## Theoretical Background

Using our knowledge from Boolean algebra and how logic gates function, we created electrical logic circuits using IC chips that contain multiple logic gates inside (the 7404 chips contain 4 NOT gates, 7408 chips contain 4 AND gates, and 7432 chips contain 4 OR gates).

The connection diagram explains how the gates must be wired. For IC chips, when orientated correctly (circle on the left hand side), start at the top array with a VCC pin which connects to the positive terminal, and the following pins follow a sequence of inputs and outputs as shown in the diagram below. The bottom array starts with the sequence of inputs and outputs and ends with the common grounding pin.

| | | |
|---|---|---|
| 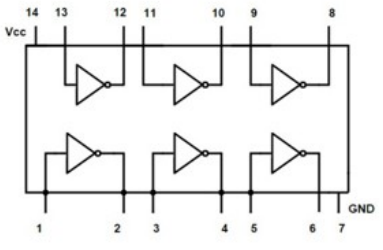  | 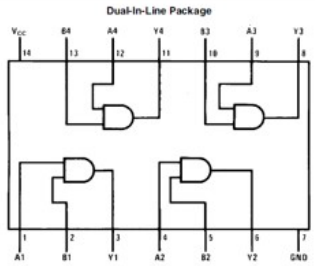  | 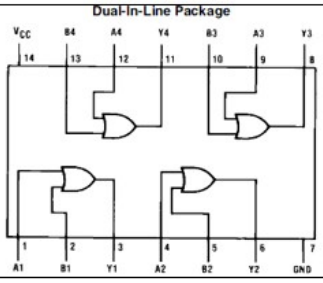  |
| 7404 hex inverters | 7408 Quad 2-input AND Gates | 7432 Quad 2-input OR Gates |

As for the bread board, the power rail which has a positive and grounding terminal, is used to connect each component to the right power pin. In the middle we wire the components together, forming a closed circuit. Pins in each column are connected and are used to “solder” components to the wiring.

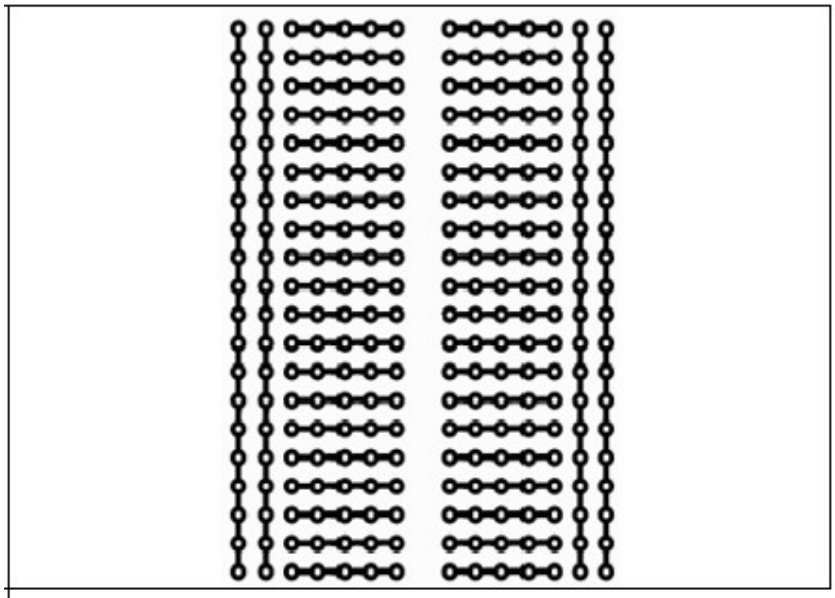

**Figure 3.b Common connections**

## Experimental work, Results and Discussion

### Lab Activities:

1. Given the following digital circuit:

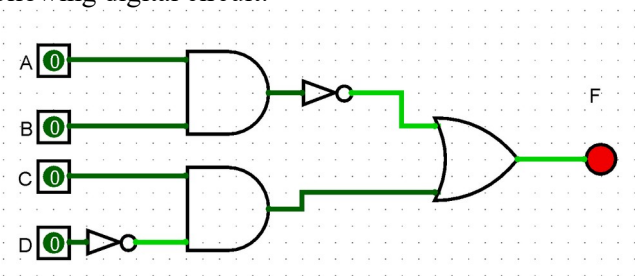


Implement the circuit on the Breadbaord and verify your answer.

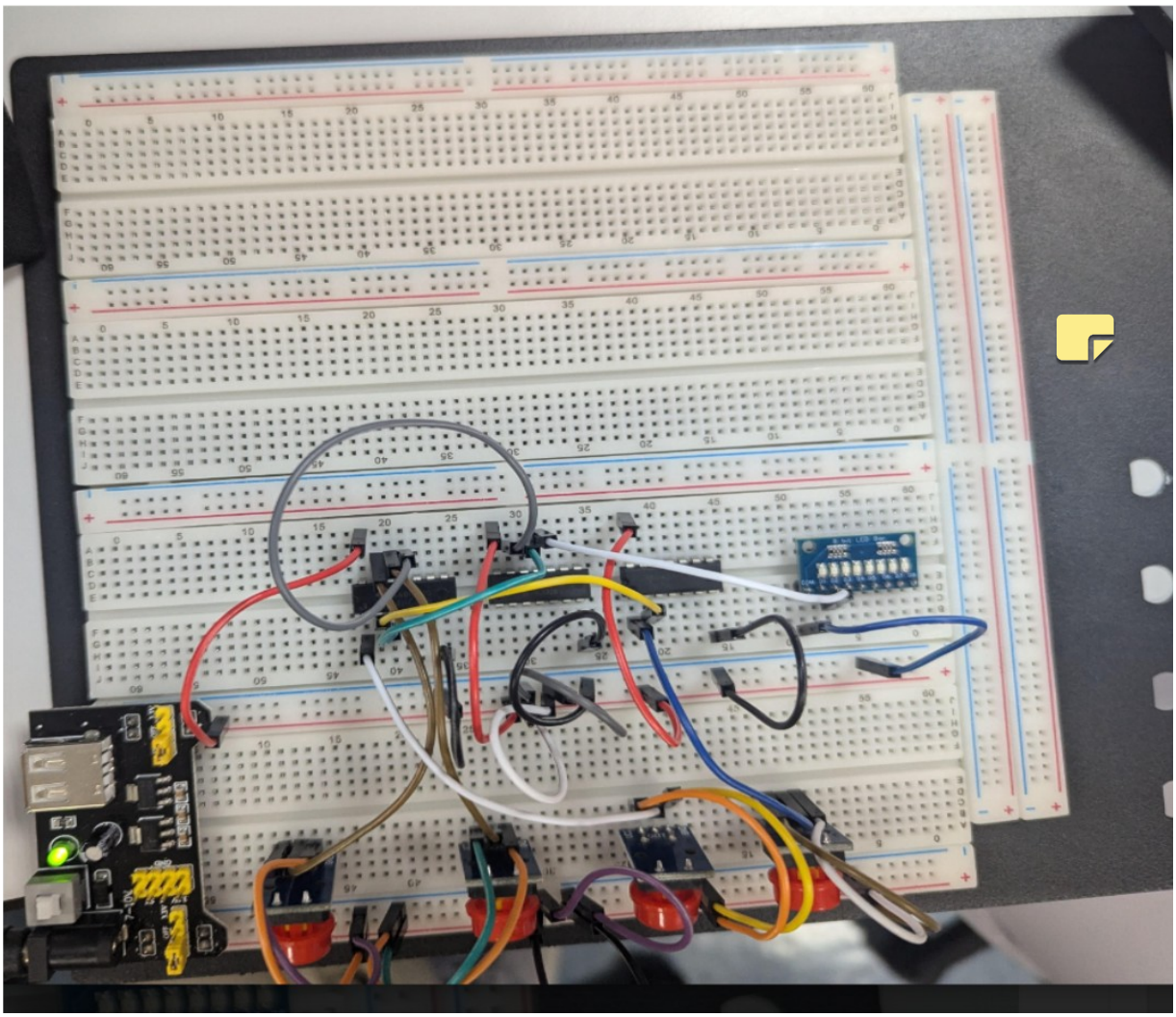

2. Given the following Boolean expression:

$$F(X,Y,Z)=\overline{X}.Y+X.Z+X.\overline{Y}.\overline{Z}$$

a. Build the truth table for F

| X | Y | Z | $F(X,Y,Z)=\overline{X}.Y+X.Z+X.\overline{Y}.\overline{Z}$ |
|---|---|---|---|
| 0 | 0 | 0 | 0 |
| 0 | 0 | 1 | 0 |
| 0 | 1 | 0 | 1 |
| 0 | 1 | 1 | 1 |
| 1 | 0 | 0 | 1 |
| 1 | 0 | 1 | 1 |
| 1 | 1 | 0 | 0 |
| 1 | 1 | 1 | 1 |

b. Draw the circuit

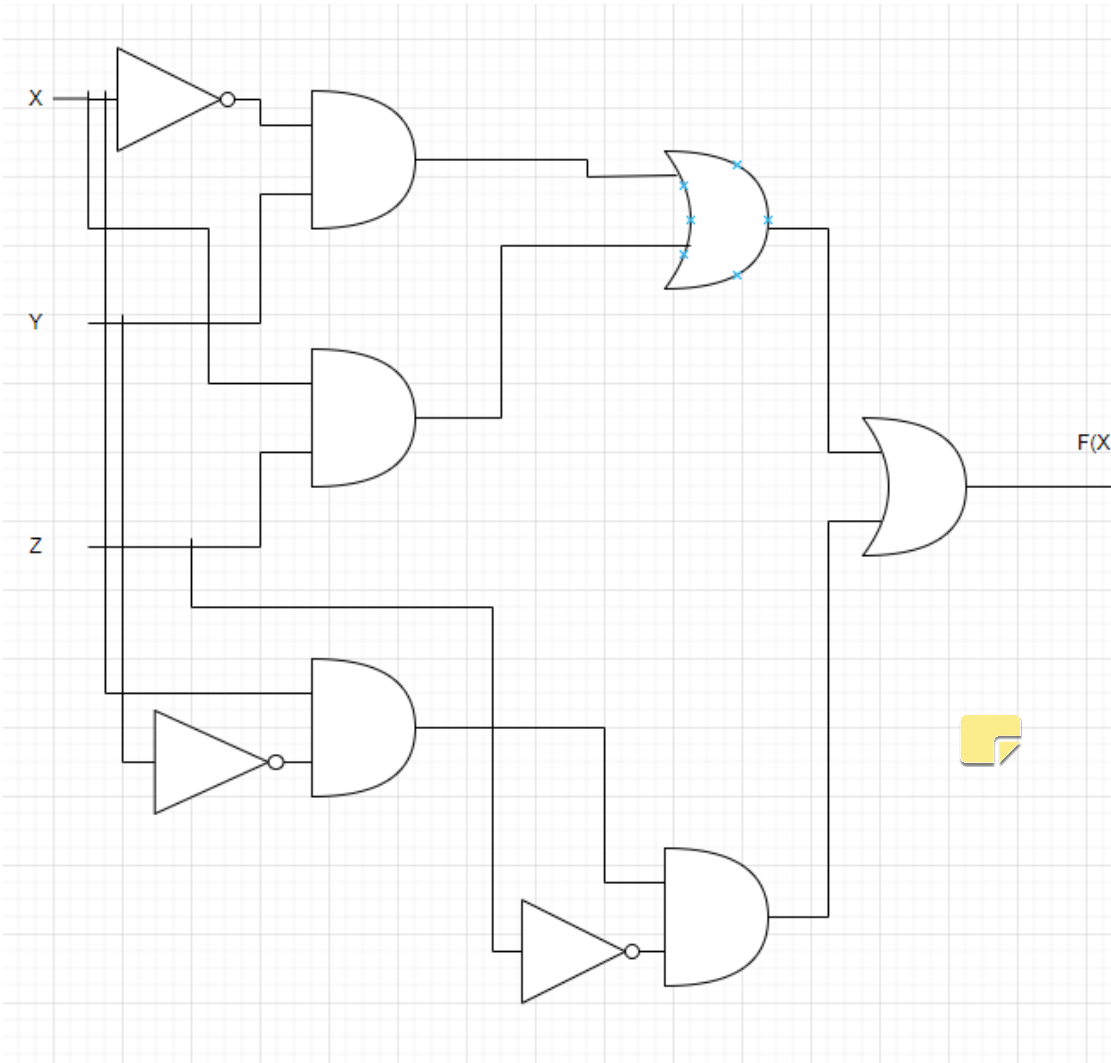

$$F(X,Y,Z)=\overline{X}.Y+X.Z+X.\overline{Y}.\overline{Z}$$

c. Simulate the circuit in part b (using the simulation tool that was used in the previous lab) to verify your truth table obtained in part a.

d.

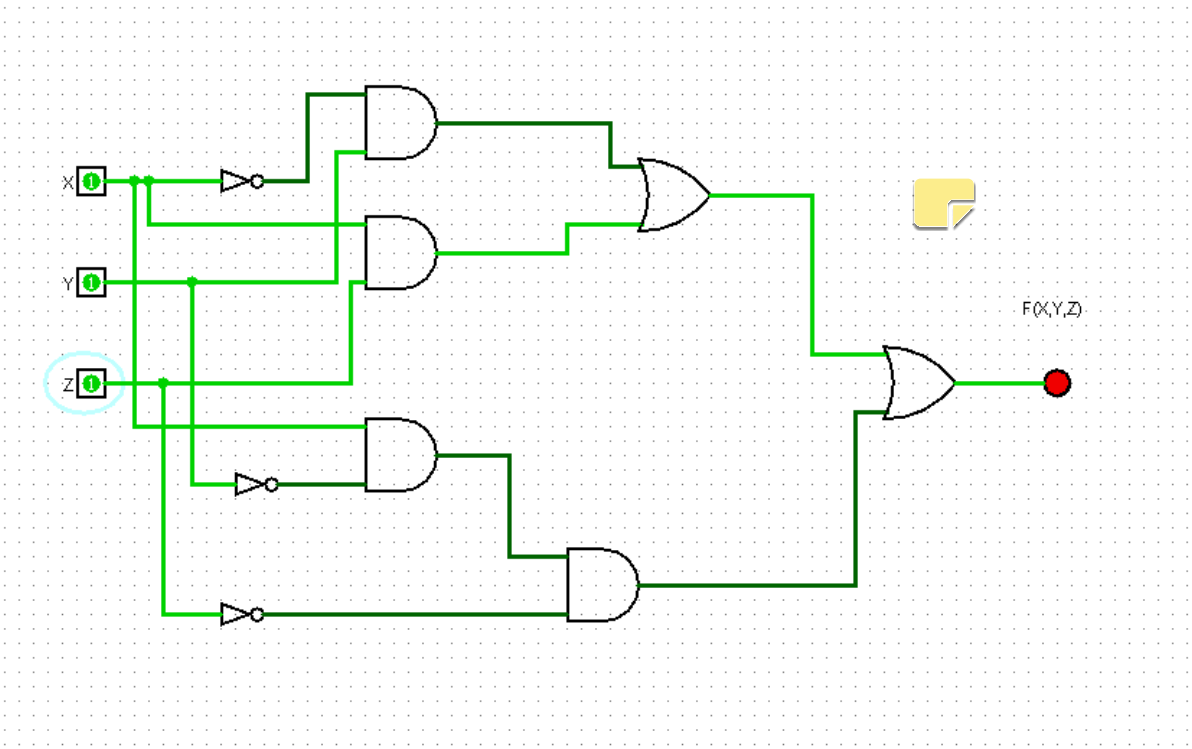


e. Implement the circuit in part b on the Breadboard.

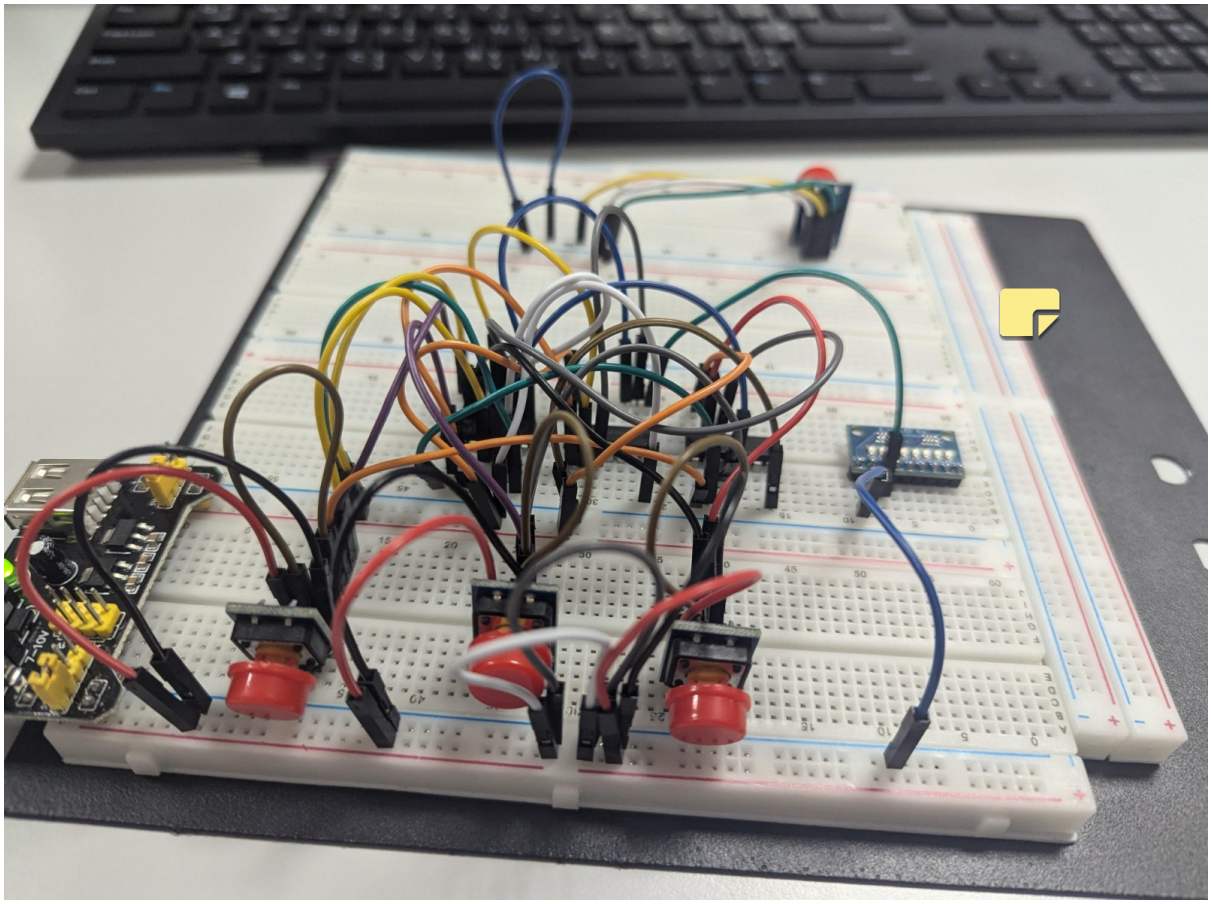

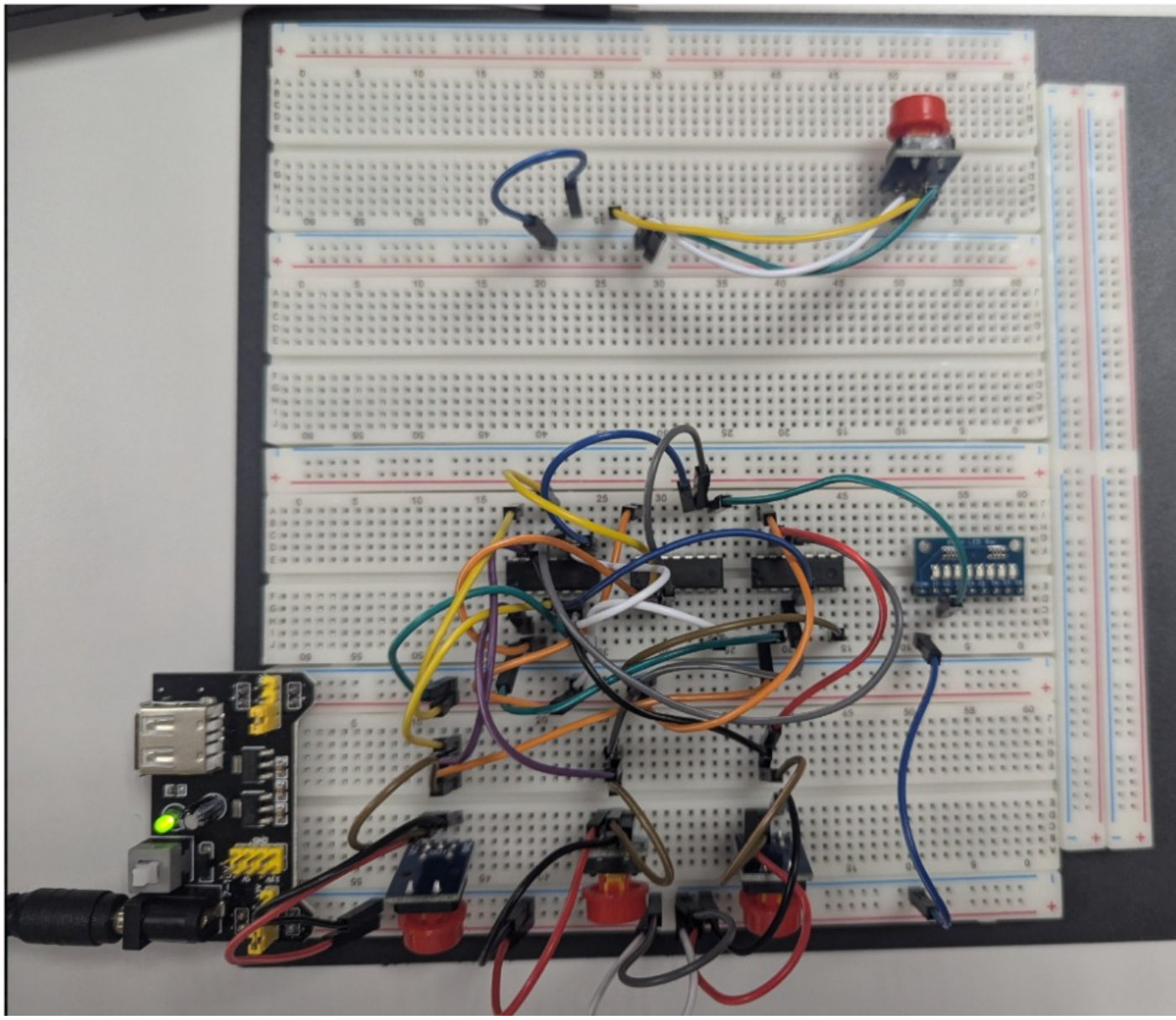

## Conclusion

In this lab, we were introduced to the physical logic gates embedded in IC chips, and we learned how to use them alongside input buttons, wires and LEDs to connect circuits together using a breadboard. We built two circuits and verified them by testing their inputs and truth tables, and by testing which input combinations would allow the LED (output) to light up.